3.1.5 Analog LSI (DZZSP01264)

(1) Block Explanation

DZZSP01264 is one chip analog LSI which is integrated peripheral analog part of FAX engine LSI. Following is the list of analog components which is integrated into this chip.
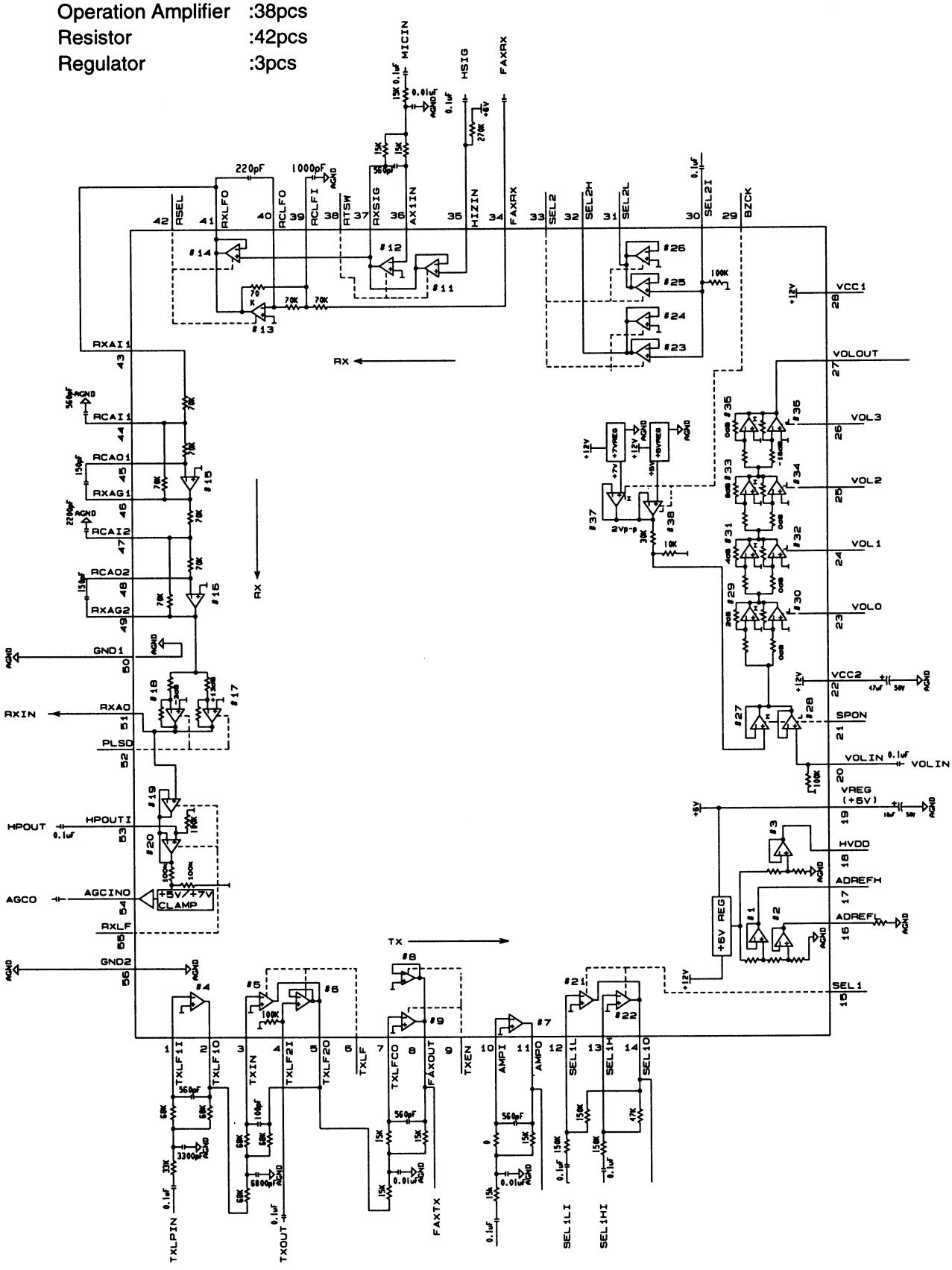
Operation Amplifier :38pcs
Resistor :42pcs
Regulator :3pcs