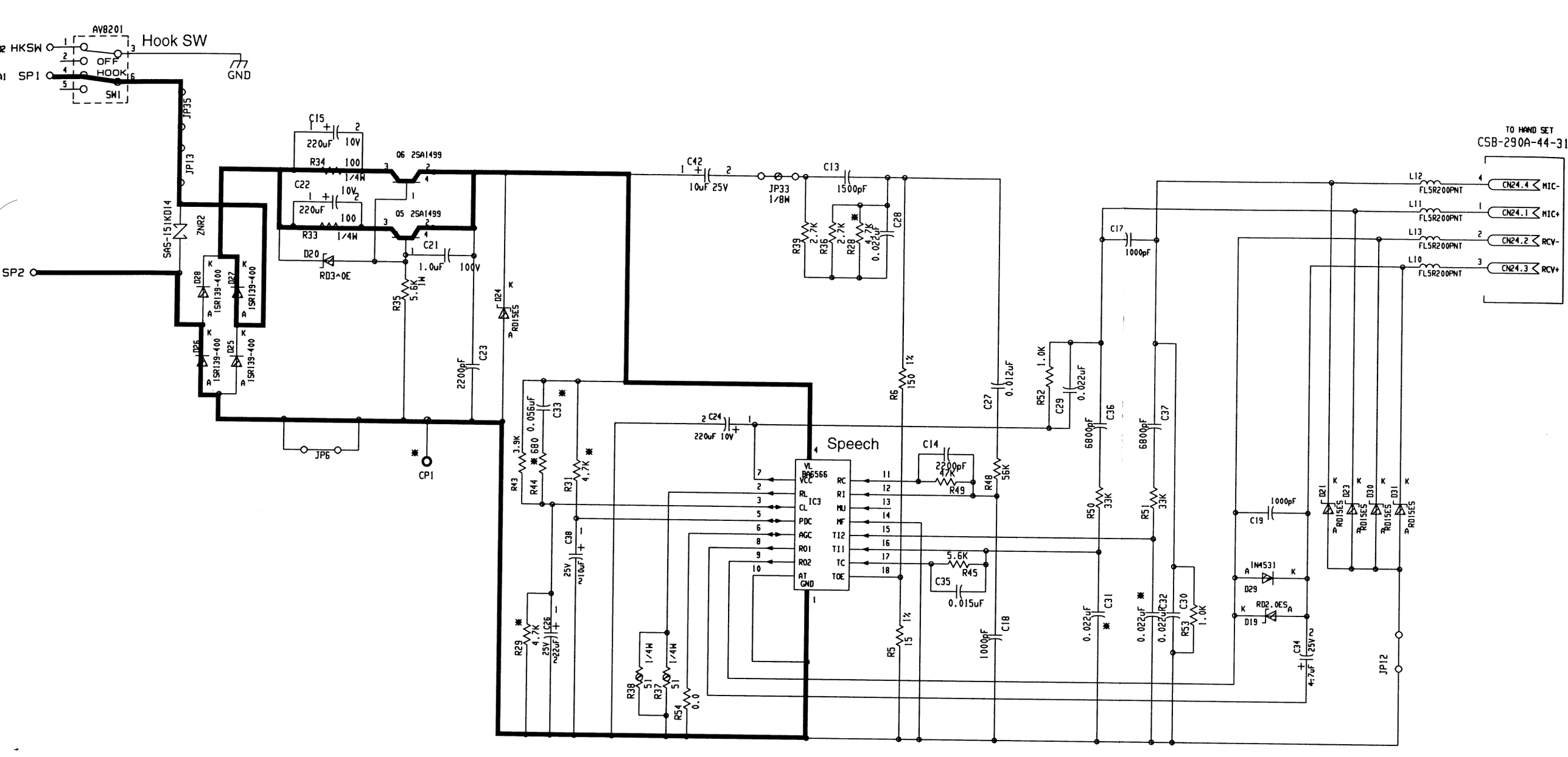
AV8201
Hook SW
HKSW
SP1
OFF
HOOK
SW1
GND
JP35
JP13
SAS-151KD14
ZNR2
SP2
D28
D27
D26
D25
1SR139-400
C15
220uF
10V
R34
100
1/4W
Q6 2SA1499
C22
220uF
10V
R33
100
1/4W
Q5 2SA1499
D20
RD3.0E
C21
1.0uF
100V
R35
5.6K
1W
2200pF
C23
D24
RD15ES
JP6
CP1
C42
10uF 25V
JP33
1/8W
C13
1500pF
R39
2.7K
R36
2.7K
R28
4.7K
C28
0.022uF
R6
150 1%
C27
0.012uF
R52
1.0K
C29
0.022uF
C17
1000pF
C36
6800pF
C37
6800pF
R50
33K
R51
33K
C31
0.022uF
C32
0.022uF
C30
R53
1.0K
C34
4.7uF 25V
JP12
C19
1000pF
D29
1N4531
D19
RD2.0ES
D21
D23
D30
D31
RD15ES
L12
L11
L13
L10
FL5R200PNT
CN24.4
CN24.1
CN24.2
CN24.3
MIC-
MIC+
RCV-
RCV+
TO HAND SET
CSB-290A-44-31
C24
220uF 10V
Speech
IC3
BA6566
VL
VCC
RL
CL
PDC
AGC
RO1
RO2
AT
GND
RC
RI
MU
MF
TI2
TI1
TC
TOE
C14
2200pF
47K
R49
R48
56K
5.6K
R45
C35
0.015uF
R5
15 1%
C18
1000pF
R43
3.9K
R44
680
C33
0.056uF
R31
4.7K
C38
10uF 25V
R29
4.7K
C26
22uF 25V
R38
51
1/4W
R37
51
1/4W
R54
0.0