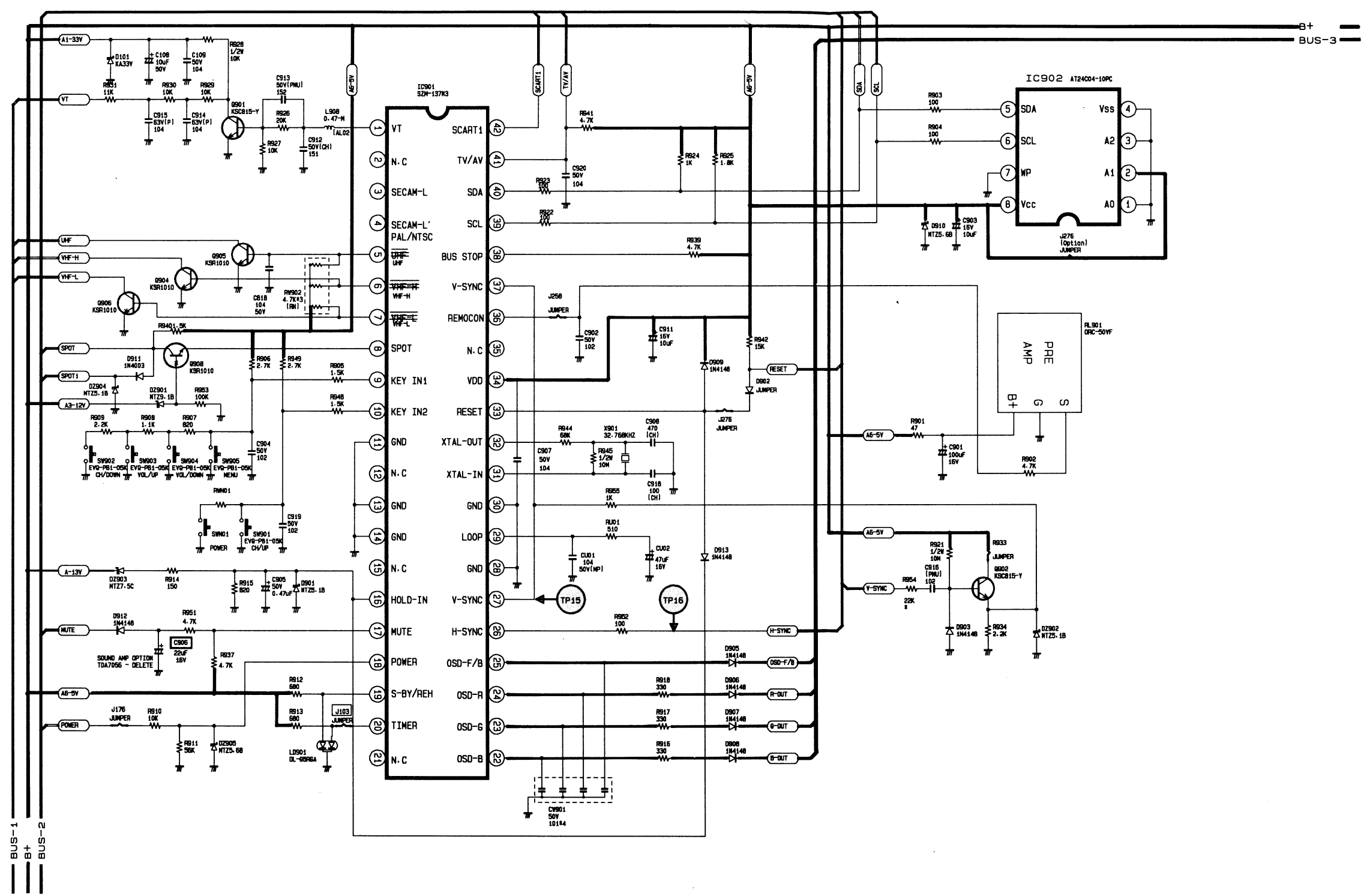

B+
BUS-3
BUS-1
B+
BUS-2
IC901
SZM-137N3
IC902 AT24C04-10PC
VT
N.C
SECAM-L
SECAM-L'
PAL/NTSC
UHF
VHF-H
VHF-L
SPOT
KEY IN1
KEY IN2
GND
N.C
GND
GND
N.C
HOLD-IN
MUTE
POWER
S-BY/REH
TIMER
N.C
SCART1
TV/AV
SDA
SCL
BUS STOP
V-SYNC
REMOCON
N.C
VDD
RESET
XTAL-OUT
XTAL-IN
GND
LOOP
GND
V-SYNC
H-SYNC
OSD-F/B
OSD-R
OSD-G
OSD-B
SDA
SCL
WP
Vcc
Vss
A2
A1
A0
J276
(Option)
JUMPER
PRE
AMP
RL901
ORC-50YF
TP15
TP16
SOUND AMP OPTION
TDA7056 - DELETE